REV	ZONE	LTR	DESCRIPTION	DATE	REVISER	APPD
0.2	D6	1	MODIFY ORDERING INFORMATION	7/31.07	TCHEN	
0.3	B2 B5	2	ADD PIN POSITION INFORMATIN	8/21.07	TCHEN	

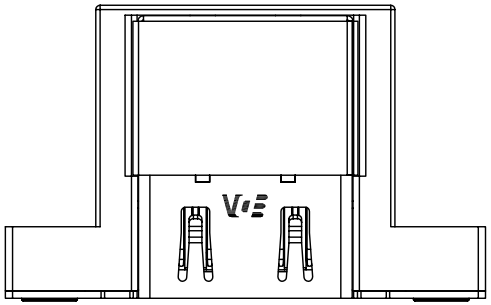

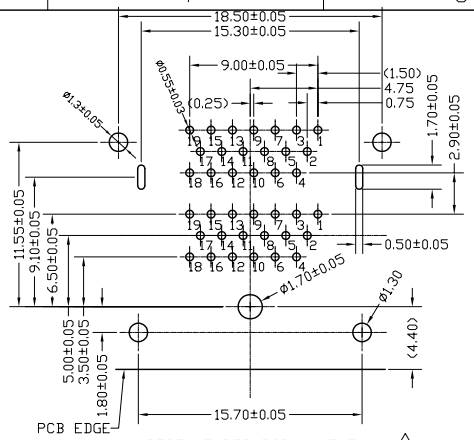

RECOMMENDED PCB LAYOUT
(THICKNESS=1.6±0.15mm) 2

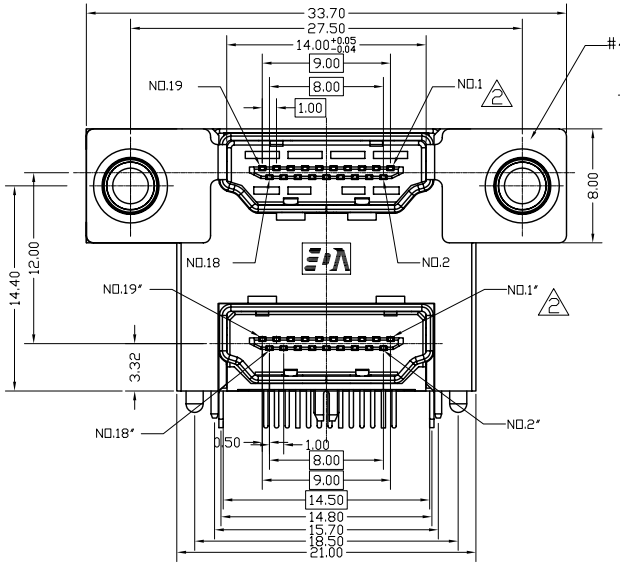

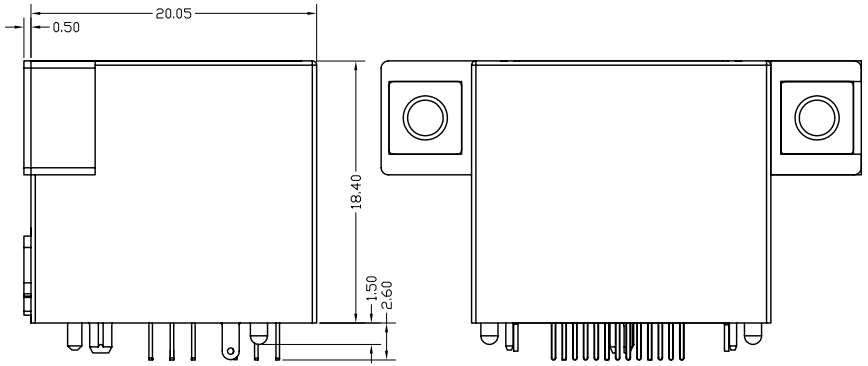

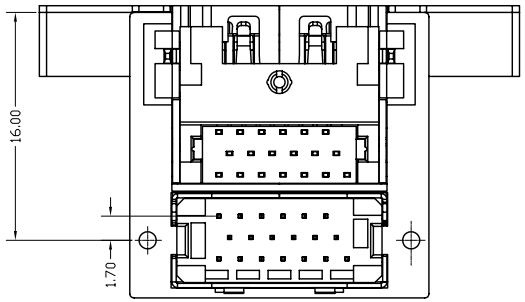

ORDERING INFORMATION

51E	H H	S	-	3	*	*	*	-	*
(1)	(2)	(3)		(4)	(5)	(6)	(7)		(8)

1. SERIES NO.
   51E: DUAL HDMI STACKED CONNECTOR THROUGH HOLE TYPE
2. PRODUCT CONSTRUCTION TYPE
   HH:HDMI TO HDMI
3. CONTACT & CONNECTIONG TYPES:
   S: SOCKET
4. COLOR CODES
   3: BLACK
5. CONTACT PLATING:
   0 :SELECTIVE GOLD FLASH OVER NICKEL
   2: SELECTIVE 15u" GOLD OVER NICKEL
   3: SELECTIVE 30u" GOLD OVER NICKEL
   4: GOLD FLASH ALLOVER OVER NICKEL
   5: SELECTIVE 15u" GOLD IN CONTACT AREA AND GOLD FLASH ALLOVER OVER NICKEL
   6: SELECTIVE 30u" GOLD IN CONTAC AREA AND GOLD FLASH ALLOVER OVER NICKEL
6. SHELL CONSTRUCTION
   D: SHELL TAIL IS THROUGH HOLE TYPE
7. SHELL PLATING
   N: SOLDERABLE NICKEL PLATED
   T: TIN PLATED
   4: GOLD FLASH PLATED
8. SUFFIX NO.
   A: WITH FREEPORT LOGO
   B: WITHOUT LOGO

2

RoHS compliant

MATERIAL	TOLERANCE UNSPECIFIED .° ° ° ± .° ° ±0.25 .° ±0.4 . ±0.8 ANGLE ± 1°	FREEPORT	
		SCALE 1:1	UNIT mm
FINISH	DRAWN jession 02/12.06	NAME DUAL HDMI STACKED CONNECTOR THROUGH HOLE TYPE	SHEET 1/1
	DESIGNER jession 02/12.06		
	CHECKED		
	APPROVED	DRAWING NO. R-S151E-0	REV 0.3

A4 RS151E01