REV.	ZONE	LTR	DESCRIPTION	DATE	REVISER	APPD

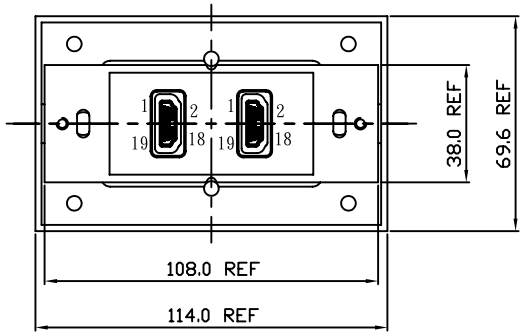

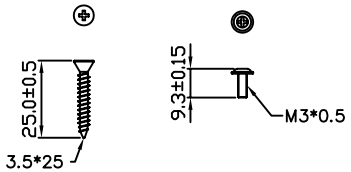

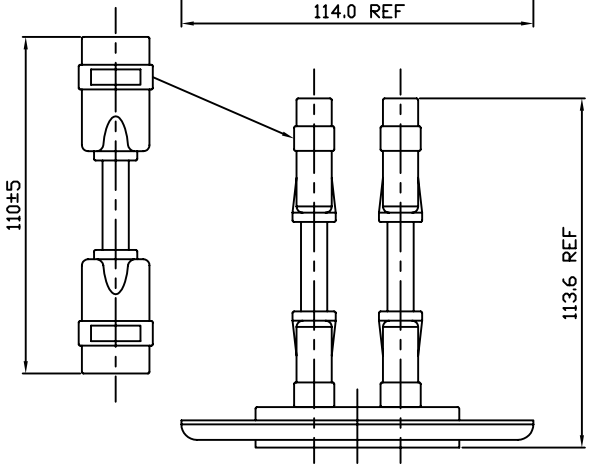

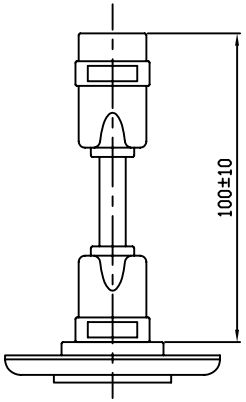

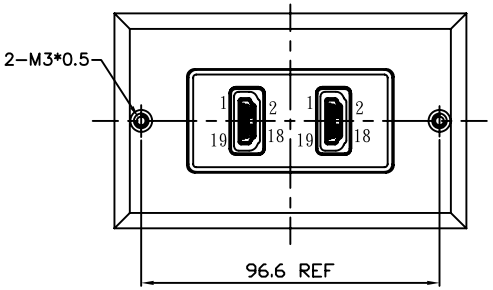

ELECTRICAL CHARACTER:

1. CUTTENT RATING: DC 1A
2. WITHSTANDING VOLTAGE: DC 300VDC,10ms
3. INSULATION RESISTANCE: 10Mohm
4. CONDUCTIVE RESISTANCE: 2 Ohm

PIN ASSIGNMENT:

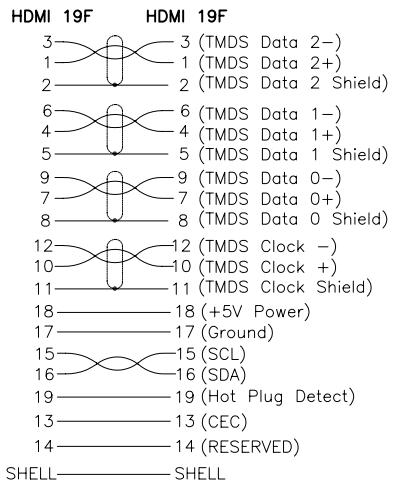

ORDERING INFORMATION:

19 01124 - 4 1 A - A
(1) (2) (3) (4) (5) (6)

(1) SERIES NUMBER:
19 : Adapter Series

(2) SEQUENCE NO.
01124(EX. 01001-01999): HDMI(FEMALE) TO HDMI(FEMALE) WITH SHORT CABLE

(3) OUTER MOLDING COLOR CODES:
3 : BLACK 4 : WHITE

(4) PLATING OF SHELL :
1 : GOLD FLASH
2 : NI-PLATED

(5) SUFFIX NO. :
A : WITH TWO PANELS

(6) SUFFIX NO. :
A : TWO POLES

NO.	PART NAME	SPEC DESCRIPTION	REMAKE
8	SCREW 2	FLAT HEAD SCREW FTS-1 3.5*25	
7	SCREW 1	SCREW M3*0.5 ø7.0*L/9.3	
6	PANEL	PANEL 2	
5	PANEL	PANEL 1	
4	PVC	PVC: 45Pa ,UL94V-0	
3	PE	PE LOW DENSITY	
2	HDMI CONN	HDMI CONN. 19P A TYPE FEMALE SOLDER TYPE	
1	CABLE	UL20276 28AWG*1PR+DRAIN WIRE+FREE EDGE AL/MYLAR*4+28AWG*1P+28AWG*5C+AL/MYLAR+ BRAID OD: 7.3 BLACK IMPEDANCE: 100 Ohm	

MATERIAL

FINISH

TOLERANCE UNSPECIFIED
.0 0 0 ±
.0 0 ±
.0 ±
. ±
ANGLE ±

DRAWN YHT
DESIGNER
CHECKED
APPROVED

FREEPORT

SCALE NONE
UNIT mm

NAME
HDMI WALL PLATE ASSEMBLY STRAIGHT TYPE

SHEET 1/1

DRAWING NO. 1901124-2

REV. 1.0