REV.	ZONE	LTR	DESCRIPTION	DATE	REVISER	APPD

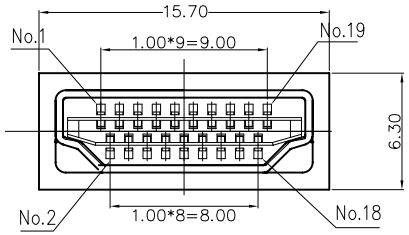

RoHS Compliant

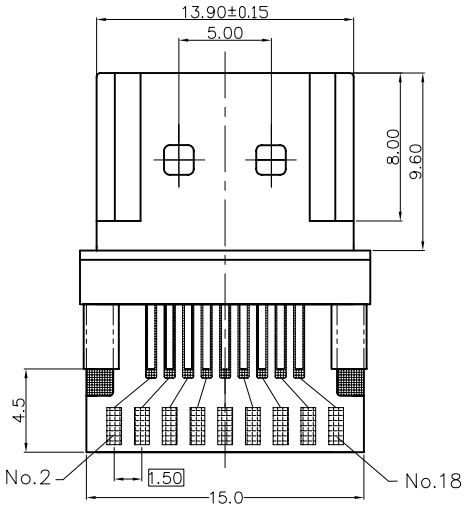

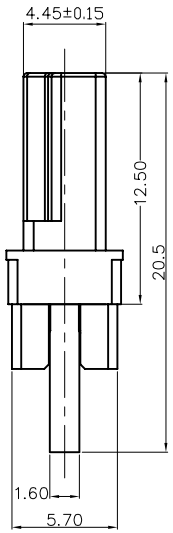

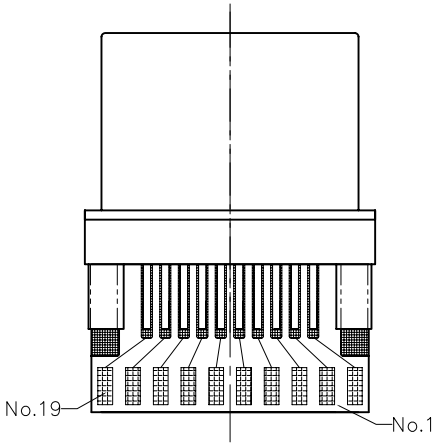

ORDERING INFORMATION:

51S 019 P – 3 * * M – E1
(1) (2) (3) (4) (5) (6) (7) (8)

(1) SERIES NUMBER:
51S : HDMI MALE CONNECTOR, SOLDER TYPE

(2) NO. OF POSITION:
019 :19POSITIONS

(3) CONTACT &CONNECTING TYPES:
P : PLUG
S : SOCKET

(4) COLOR CODES:
3 :BLACK

(5) PLATING OF CONTACT :
0 : GOLD FLASH OVER NICKEL
2 : 15u"GOLD OVER NICKEL
3 : 30u"GOLD OVER NICKEL

(6) PLATING OF SHELL :
N : Ni PLATING
L : Au:3u"Min.ALL PLATING
4 : GOLD FLASH. ALL PLATING
5 : Au:15u"Min.ALL PLATING

(7) SHELL CONTRUCTION TYPE:
M : DIE CASTING SHELL

(8) SUFIX NO. :
E1 : WITHOUT COVER AND WITH 1.50 PITCH PCB

NOTE:

1. MECHANICAL :
   1.1 INSERTION FORCE :44.1 N MAX
   1.2 WITHDRAWAL FORCE :9.8 N MIN.
2. ELECTRICAL :
   2.1 CONTACT CURRENT RATING: 0.5A MIN.
   2.2 VOLTAGE RATING :40V AC (rms)
   2.3 WITHSTANDING VOLTAGE: 500 VAC FOR 1 MINUTE.
   2.4 INSULATION RESISTANCE: 100 MEGAOHMS MIN.
   2.5 CONTACT RESISTANCE: 30 MILLIOHMS MAX.
3. ENVIRONMENTAL :
   3.1 OPERATING TEMPERATURE:−25°C TO +85°C

MATERIAL	TOLERANCE UNSPECIFIED .0 0 0 ± .0 0 ± 0.25 .0 ± 0.38 . ± ANGLE ± 2°	FREEPORT	
		SCALE NONE	UNIT MM
FINISH	Draw Bill 04/11 05 Designer Bill 04/11 05 Checked peter Approved john2/23'06	NAME HDMI MALE CONNECTER (WITH PCB)	SHEET 1/1
		Drawing No. R-S151S-11	REV. 1

A4 RS151S111