REV	ZONE	LTR	DESCRIPTION	DATE	REVISER	APPD

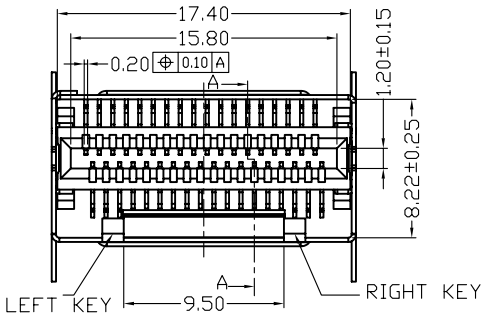

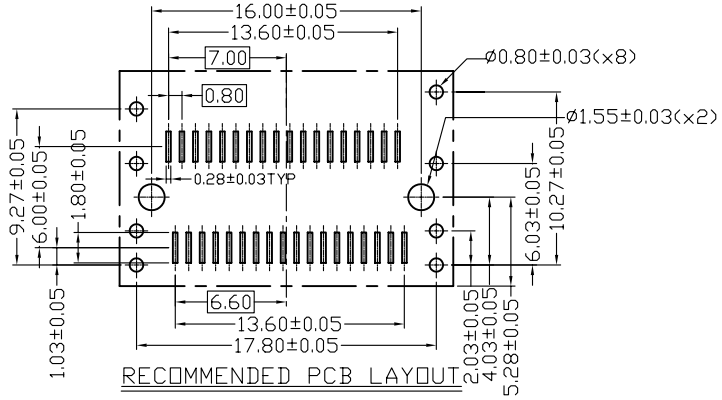

RECOMMENDED PCB LAYOUT

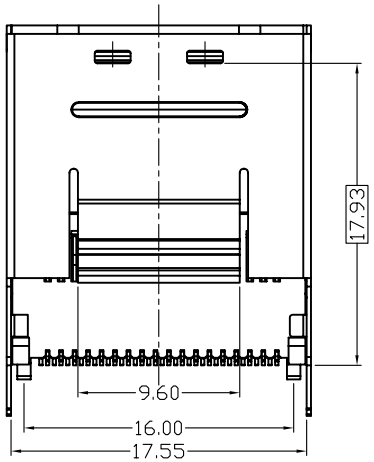

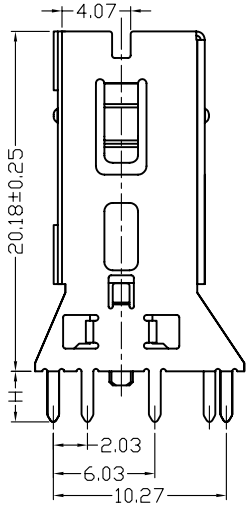

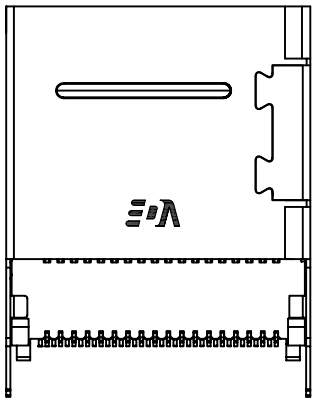

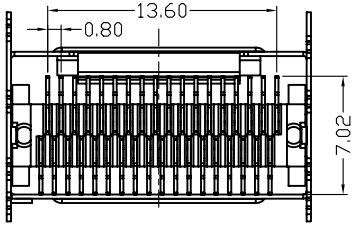

ORDERING INFORMATION

61 V 036 S – 3 * 1 N 0 – A

(1) (2) (3) (4) (5) (6) (7) (8) (9) (10)

1. SERIES NO.
   61: MINI SAS CONNECTOR
2. TAIL CONSTRUCTION TYPE
   V: VERTICAL SMT TYPE
3. NUMBER OF PIN
   036: 36 POSITIONS
4. CONTACT & CONNECTIONG TYPES:
   P: PLUG
   S: SOCKET
5. : COLOR CODES
   3: BLACK
6: CONTACT PLATING:
   0: GOLD FLASH OVER NICKEL,SOLDER AREA PLATING TIN
   2: 15U" GOLD OVER NICKEL,SOLDER AREA PLATING TIN
   3: 30U" GOLD OVER NICKEL,SOLDER AREA PLATING TIN
   4: GOLD FLASH OVER NICKEL,SOLDER AREA PLATING GOLD
   5: 15U" GOLD OVER NICKEL,SOLDER AREA PLATING GOLD
   6: 30U" GOLD OVER NICKEL,SOLDER AREA PLATING GOLD
7: SHELL CONSTRUCTION
   1:THROUGH HOLE TYPE H=2.80mm TAIL
8: SHELL PLATING
   N: SOLDERABLE NICKEL PLATED
9: KEY TYPE
   0: WITHOUT KEY
   1: LEFT KEY
   2: RIGHT KEY
   3: DUAL KEY
10: SUFFIX NO.
   A: WITH FREEPORT LOGO
   B: WITHOUT FREEPORT LOGO

ITEM	PART NAME	Q'TY	MATERIALS	NOTES
③	CONTACT	36	COPPER ALLOY	GOLD PLATED
②	HOUSING	1	HIGH TEMPERATURE THERMOPLASTIC	UL 94V-0
①	SHELL	1	COPPER ALLOY	SOLDERABLE NICKEL PLATED

SPECIFICATIONS

CURRENT: 0.5A/CONTACT
VOLTAGE: 30VAC/CONTACT
LOW LEVEL CONTACT RESISTANCE: 80 mohm Maximum
MATING FORCE: MAXIMUM OF 55.5N
UNMATING FORCE: MAXIMUM OF 49.0N
OPERATION TEMPERATURE: −20°C TO +85°C

RoHS Compliant

MATERIAL

FINISH

TOLERANCE UNSPECIFIED
.° ° ° ±
.° ° ±0.20
.° ±0.25
. ±
ANGLE ± 1°

DRAWN Jerrypi 6/29.07
DESIGNER
CHECKED
APPROVED

FREEPORT

SCALE 1:1
UNIT mm

NAME MINI SAS INTERNAL 36PIN VERTICAL SMT TYPE
SHEET 1/1
DRAWING NO. R-S161V-0
REV 1

A4 RS160V01